Instrumentation system for registration of ultra low frequency gravitational field disturbances

S.A. Shopin,
M. Sc., IEEE Student Member, main specialist on informational technologies and geoinformation systems
Tul'skya geologorazvedochnaya partiya Ltd., Tula

Torsion balance principle of operation

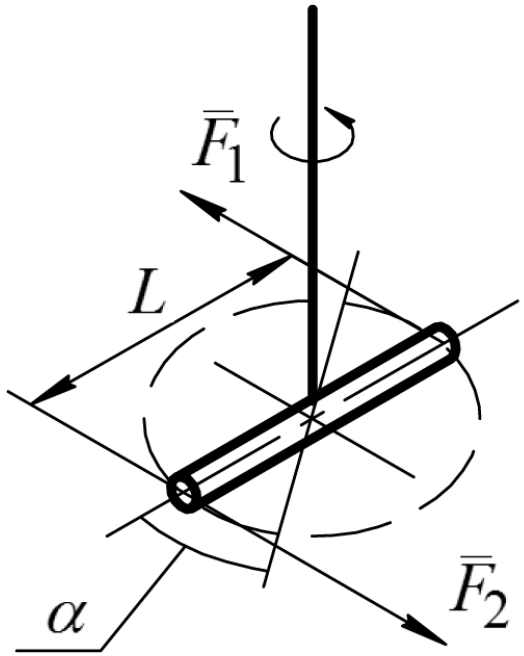

$$K_f \alpha = \frac{L}{2}(F_1 + F_2)$$

α – beam rotational angle, K_f – torsional rigidity of the fiber, F_1 and F_2 – forces acting on the sensitive elements

Torsion system of the instrument

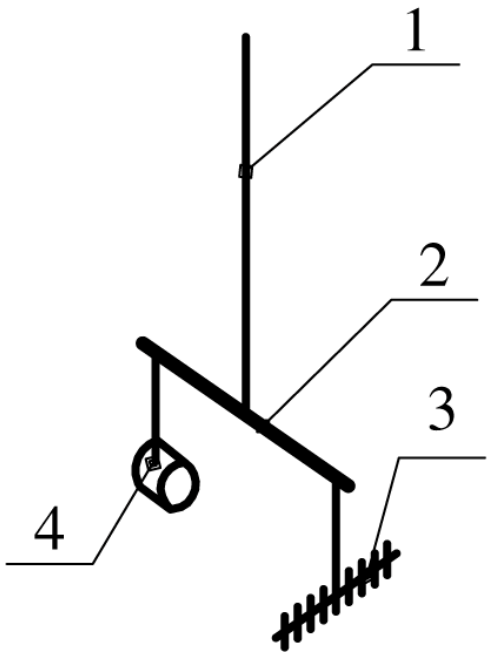

1 – suspension fiber; 2 – beam; 3 – weight-antenna;
4 – weight-counterbalance

Wideband gradiometer structural chart

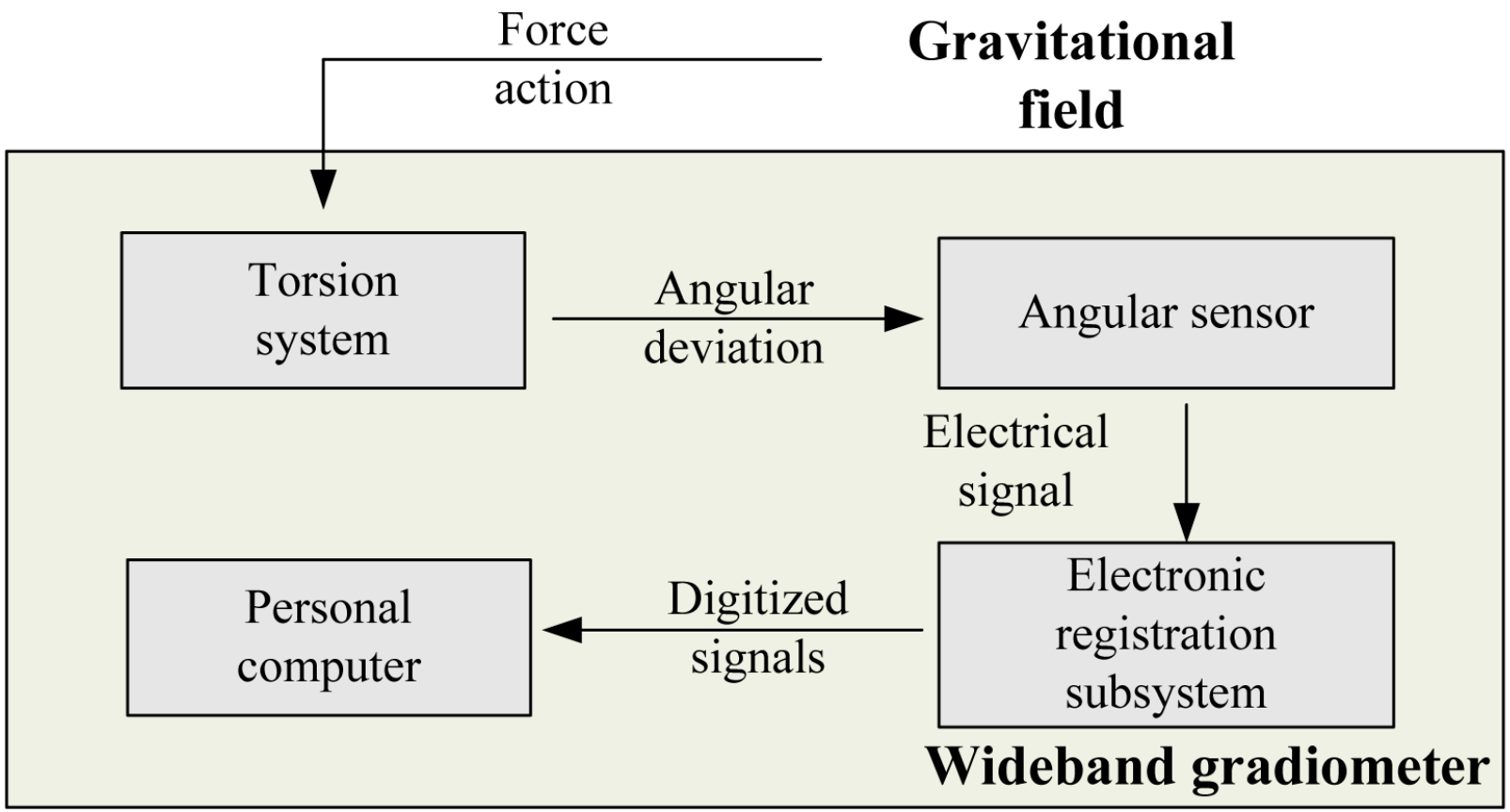

System case-screen

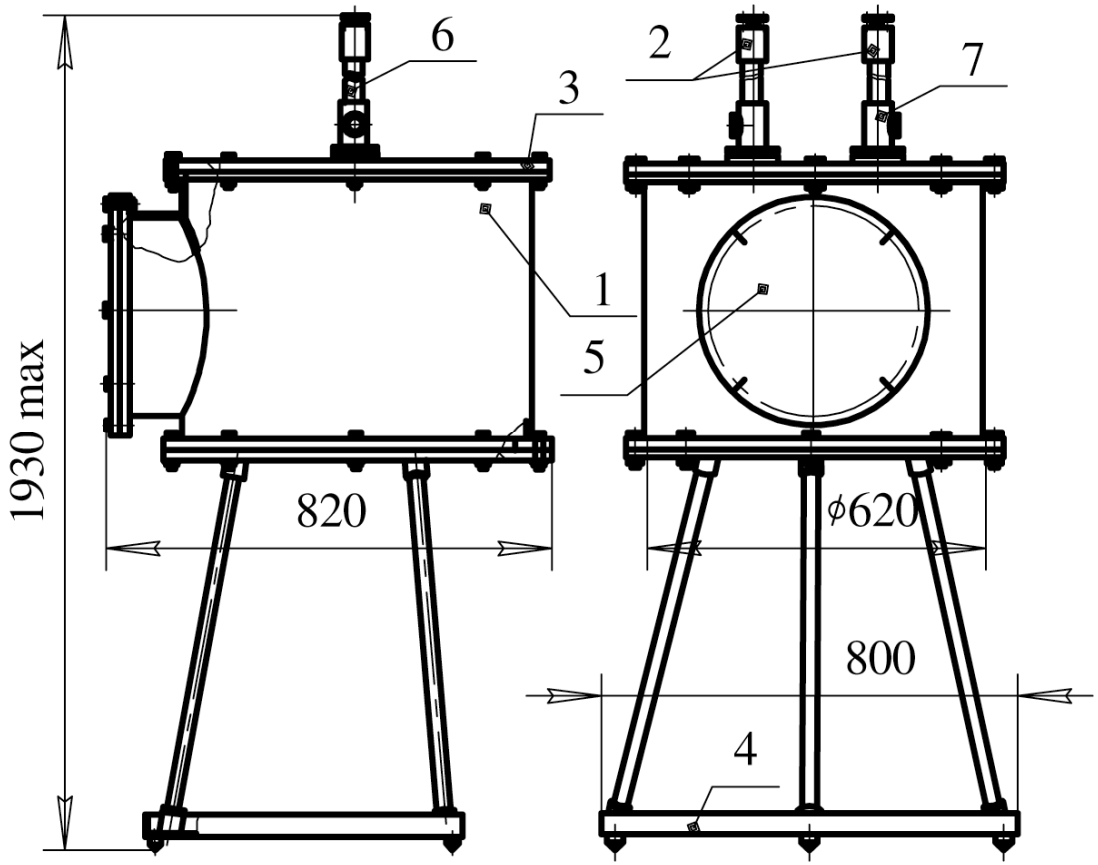

1 – working volume of the case; 2 – fastening and regulation device of the torsion system; 3 – case cover; 4 – instrument basement; 5 – cover of the working window; 6 – duct; 7 – duct stand

Angular sensor principle of operation

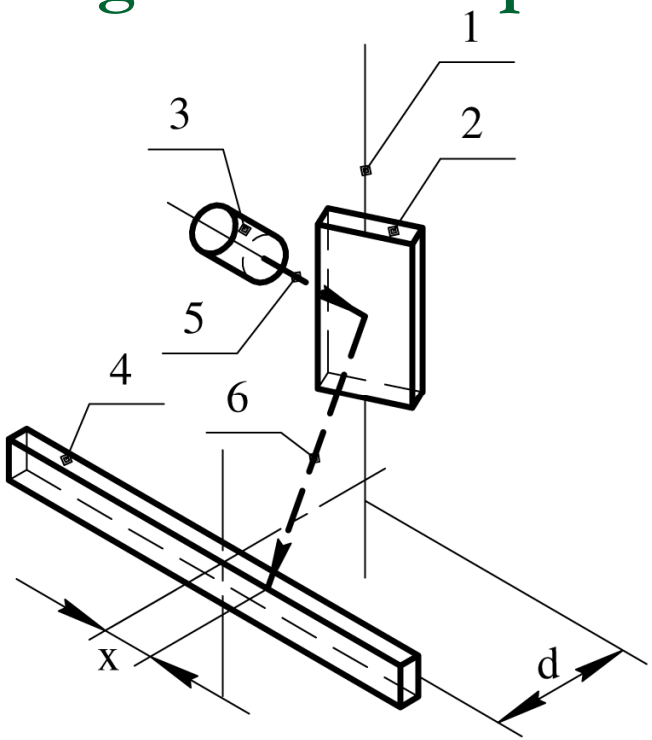

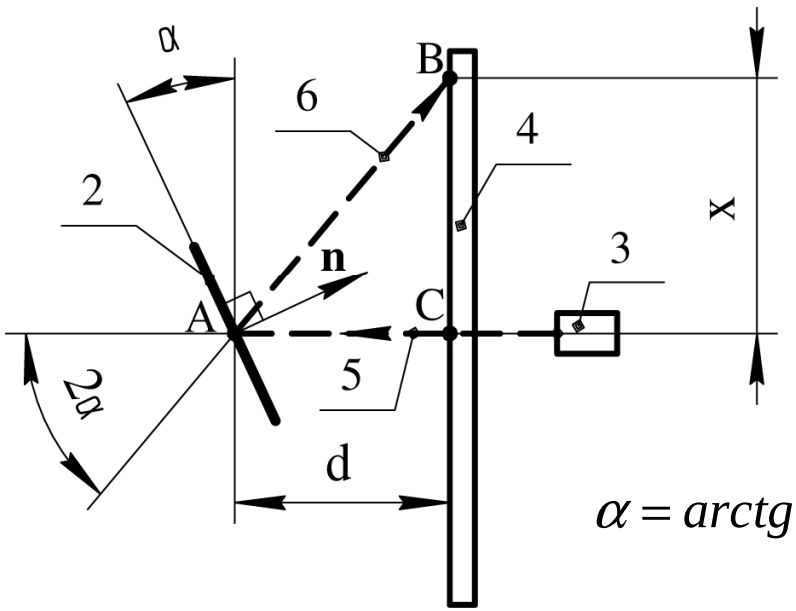

$$\alpha = arctg\left(\frac{x}{d}\right)$$

1 – suspension fiber, 2 – mirror, 3 – LED and the optical system, 4 – position-sensitive photodetector, 5 – LED light ray, 6 – ray reflected by the mirror, d – distance from the photodetector to the mirror, x – distance from the photodetector centre to the light beam centre, α – beam rotational angle, n – horizontal component of the vector perpendicular to the surface of the mirror

Fragment of the duct stand model

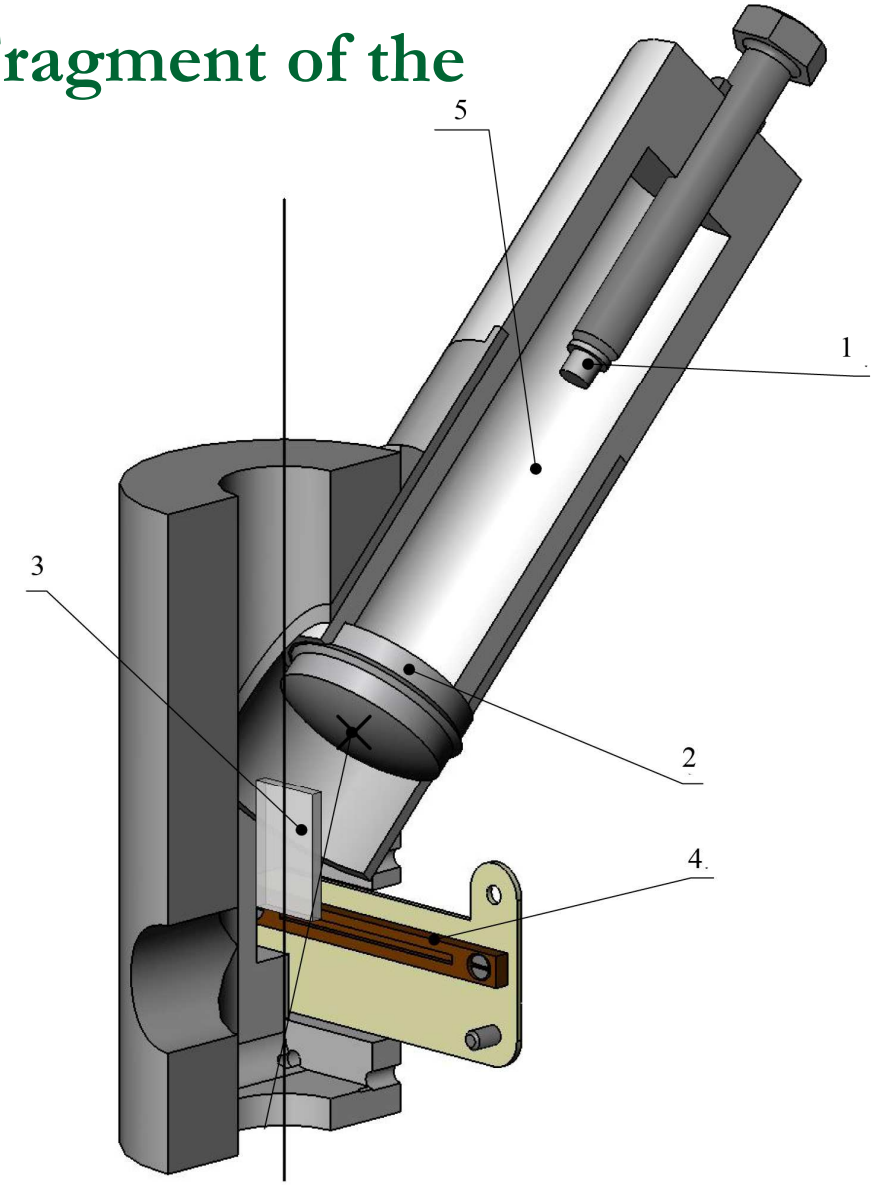

1 – LED,
2 – lens,
3 – mirror,
4 – photodetector,
5 – surface covered with black light absorbing material

Electronical registration subsystem chart

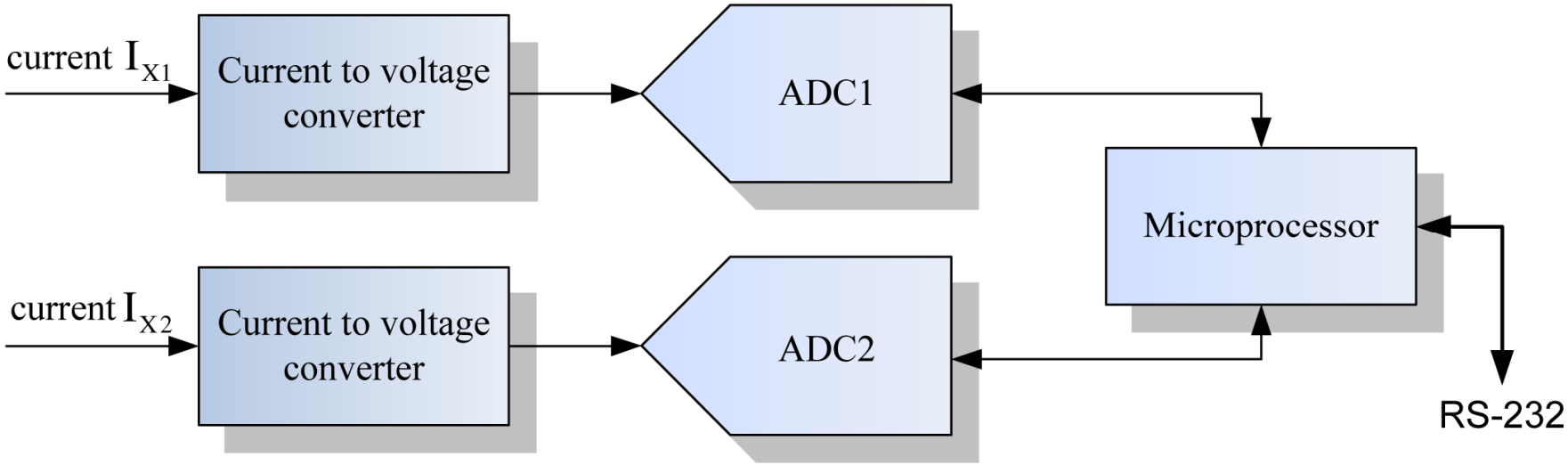

ADCs: 24-bit precision low-speed delta-sigma ADI's AD7719

Current to voltage converter

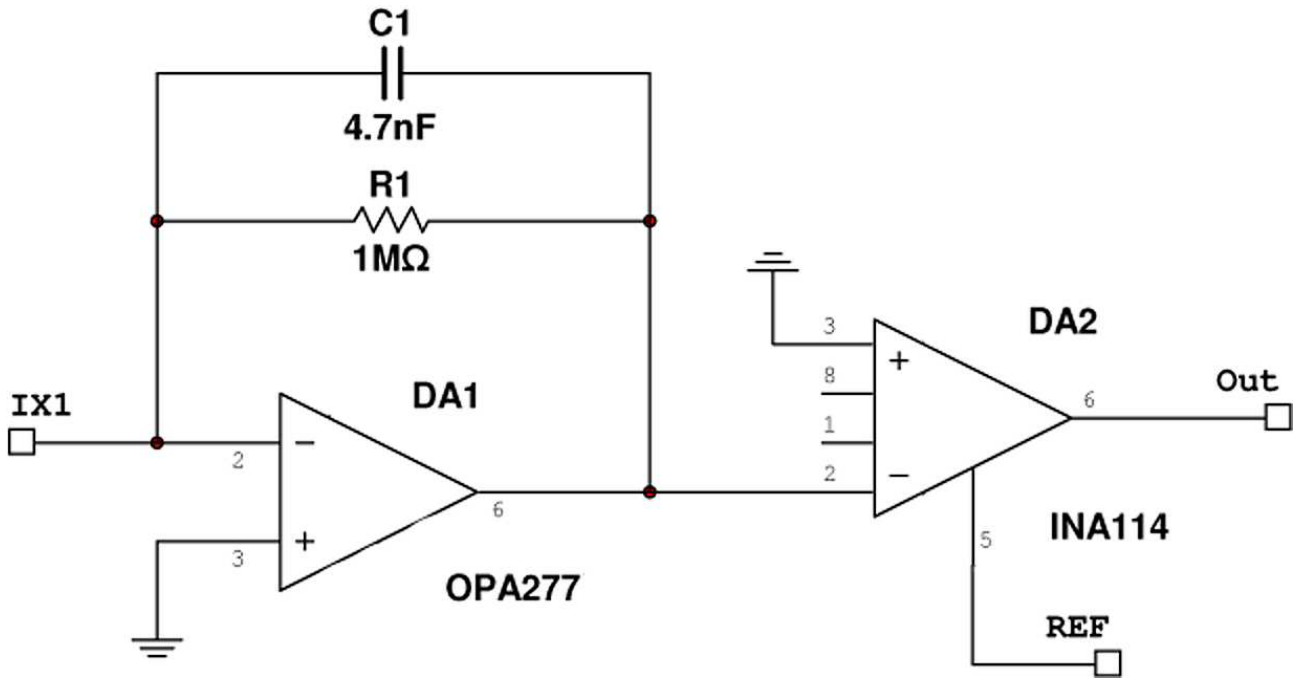

Software modules and their interaction

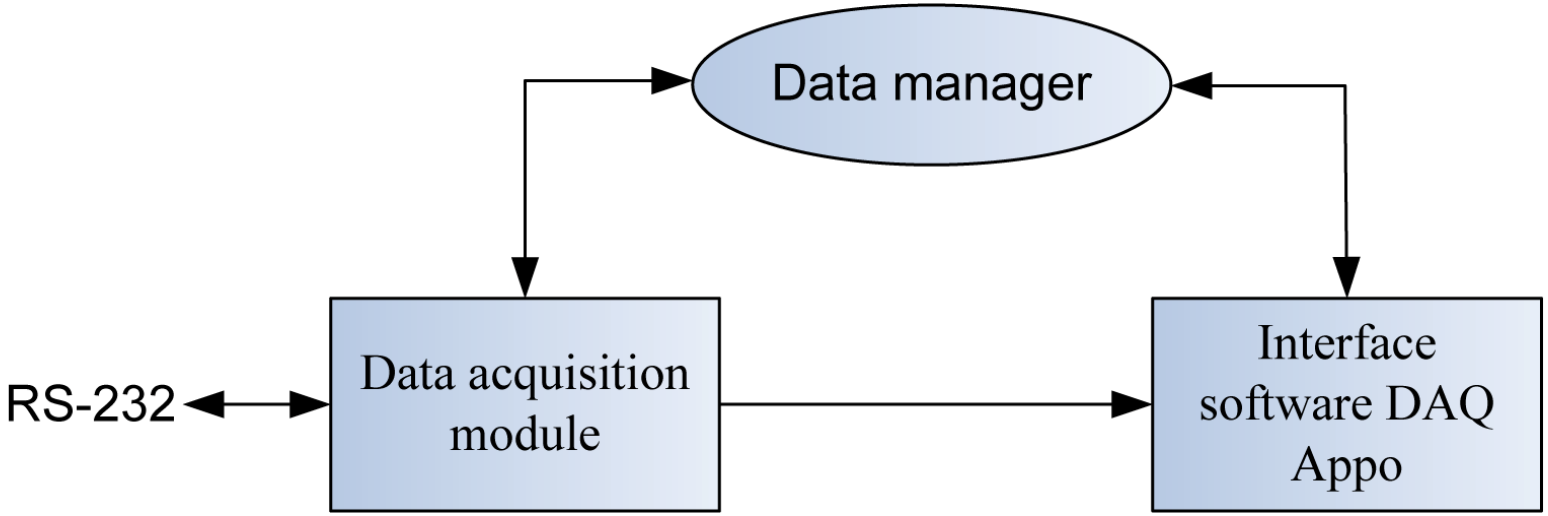

Data manager: Microsoft® SQL Server® 2005 Express

System data example

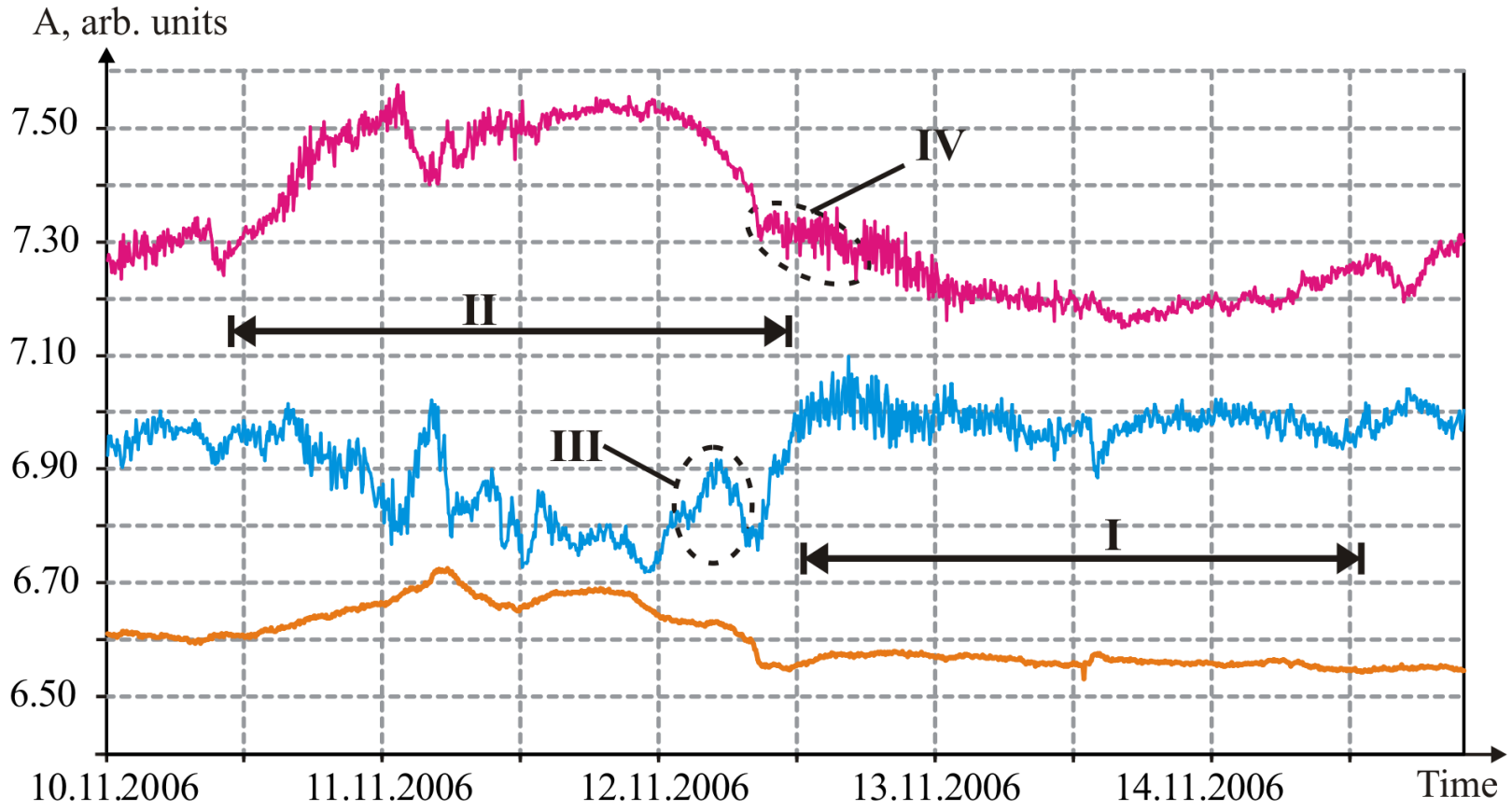

I – nearly steady state**; II –** low frequency anomaly**; III, IV** – high frequency anomalies (but also in the low frequency range)

HF signals prior to Feb 2009 Indonesia Mw7.1 EQ

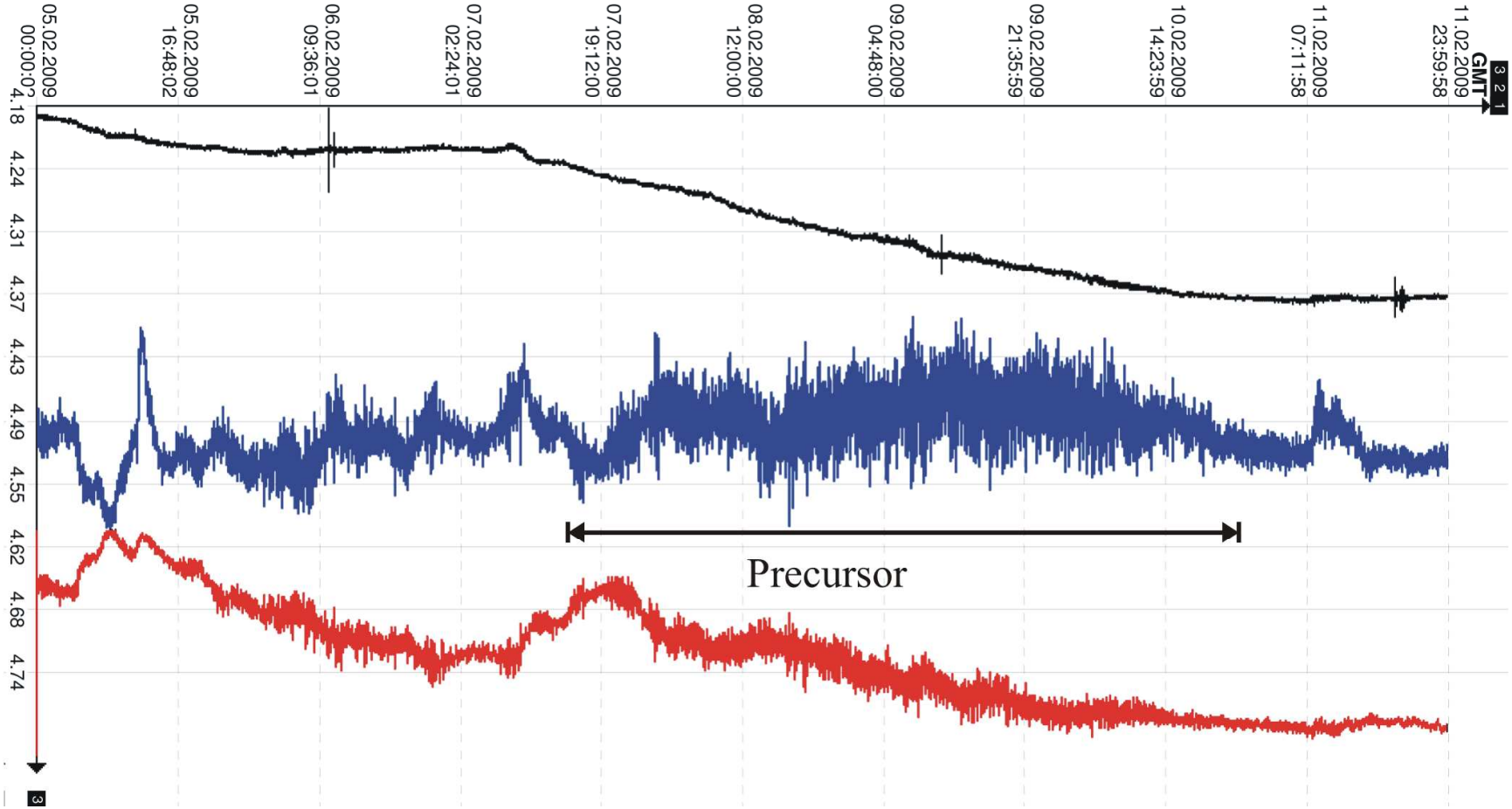

Precursor: 07.02.2009 –10.02.2009

Earthquake: 11.02.2009

HF signals prior to May 2009 Honduras Mw7.1 EQ

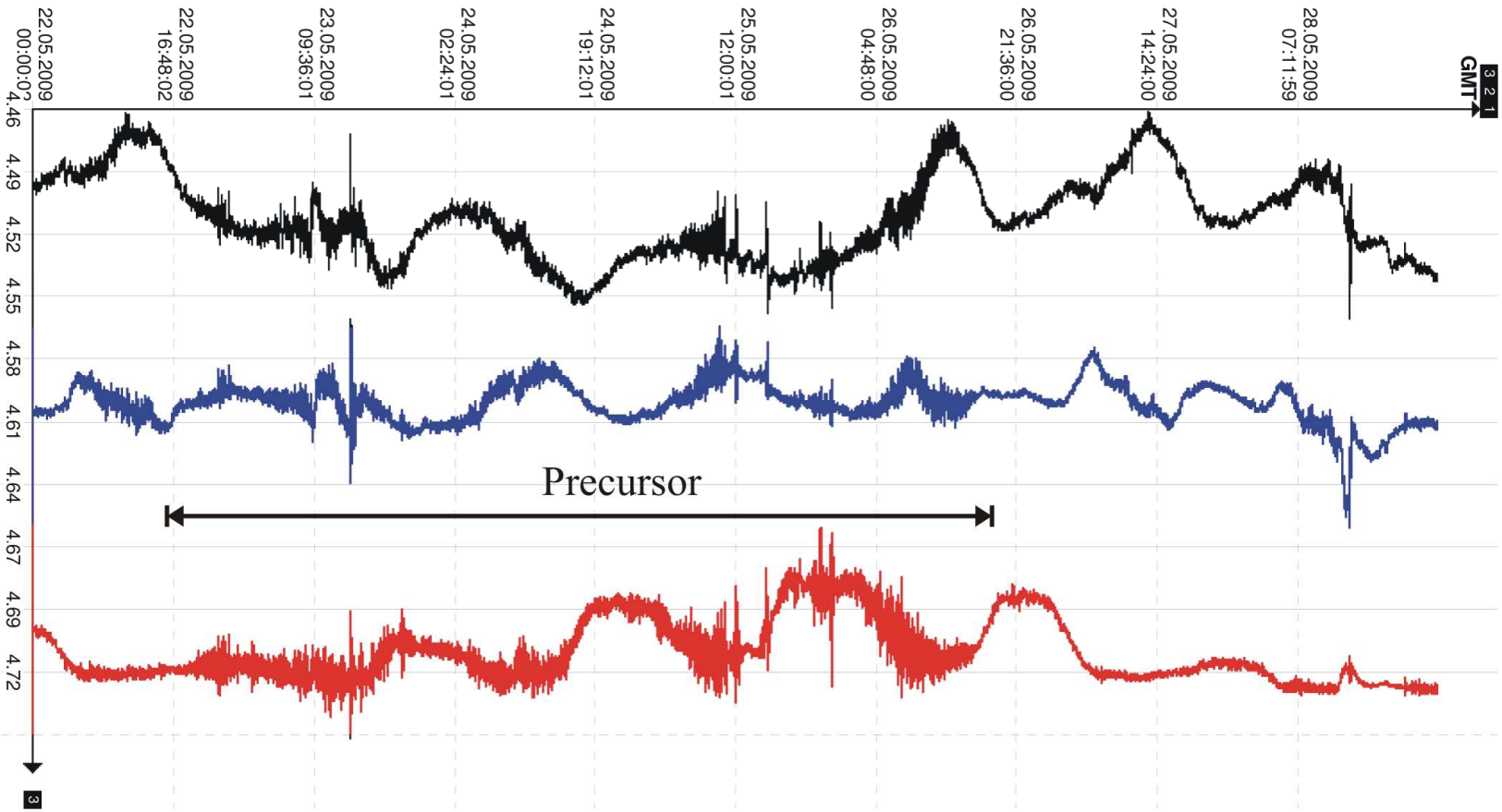

Precursor: 22.05.2009 –26.05.2009

Earthquake: 28.05.2009

HF signals prior to Sep 2009 Samoa Mw 8.1 and Indonesia Mw 7.6 EQs

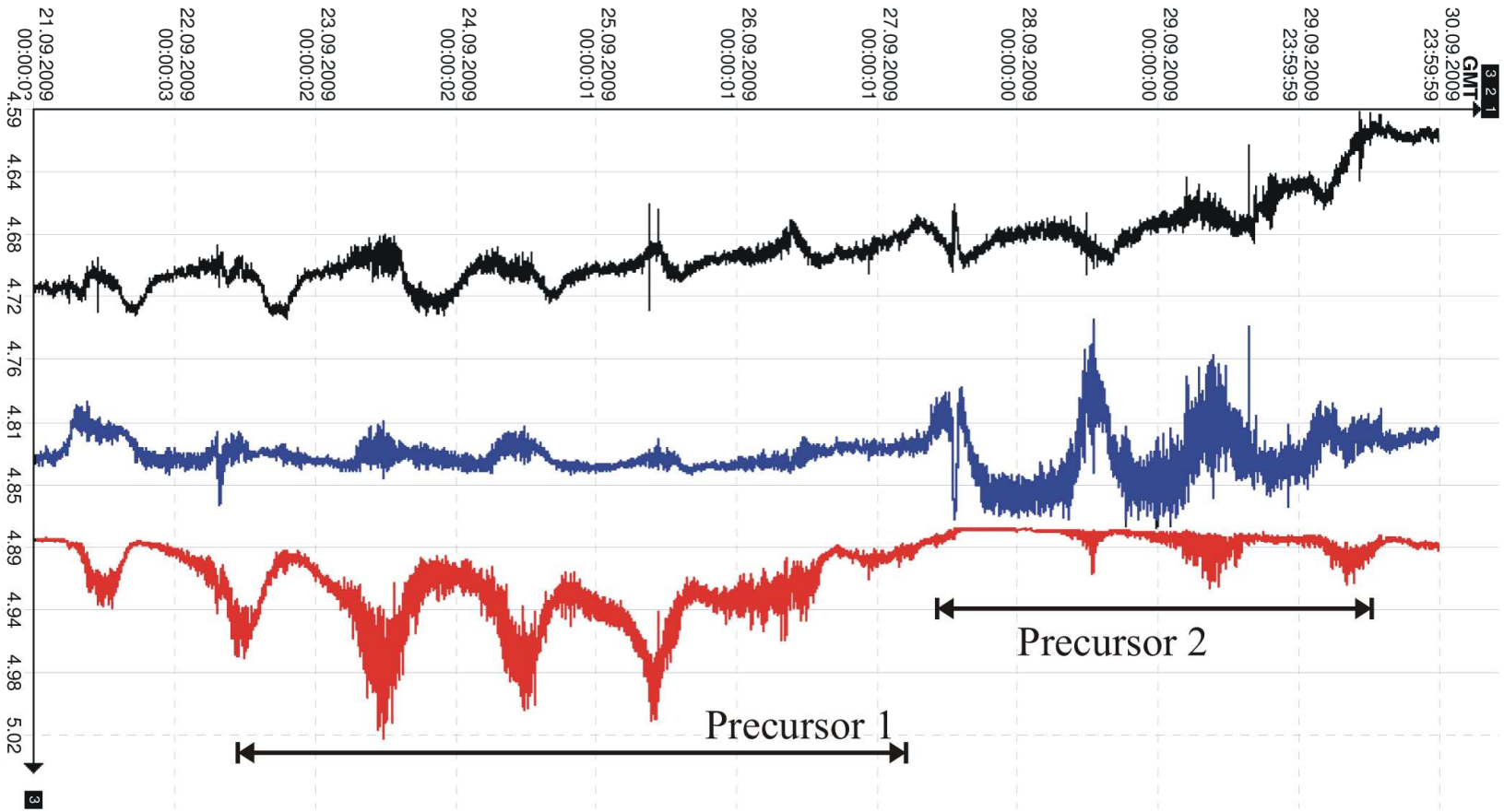

Precursor 1: 22.09.2009 –27.09.2009
Precursor 2: 27.09.2009 –29.09.2009

Earthquake 1: 29.09.2009 (Samoa)
Earthquake 2: 30.09.2009 (Indonesia)

HF signals prior to Oct 2009 EQ's cycle (3 events) with Mw 7.4, 7.8 and 7.4

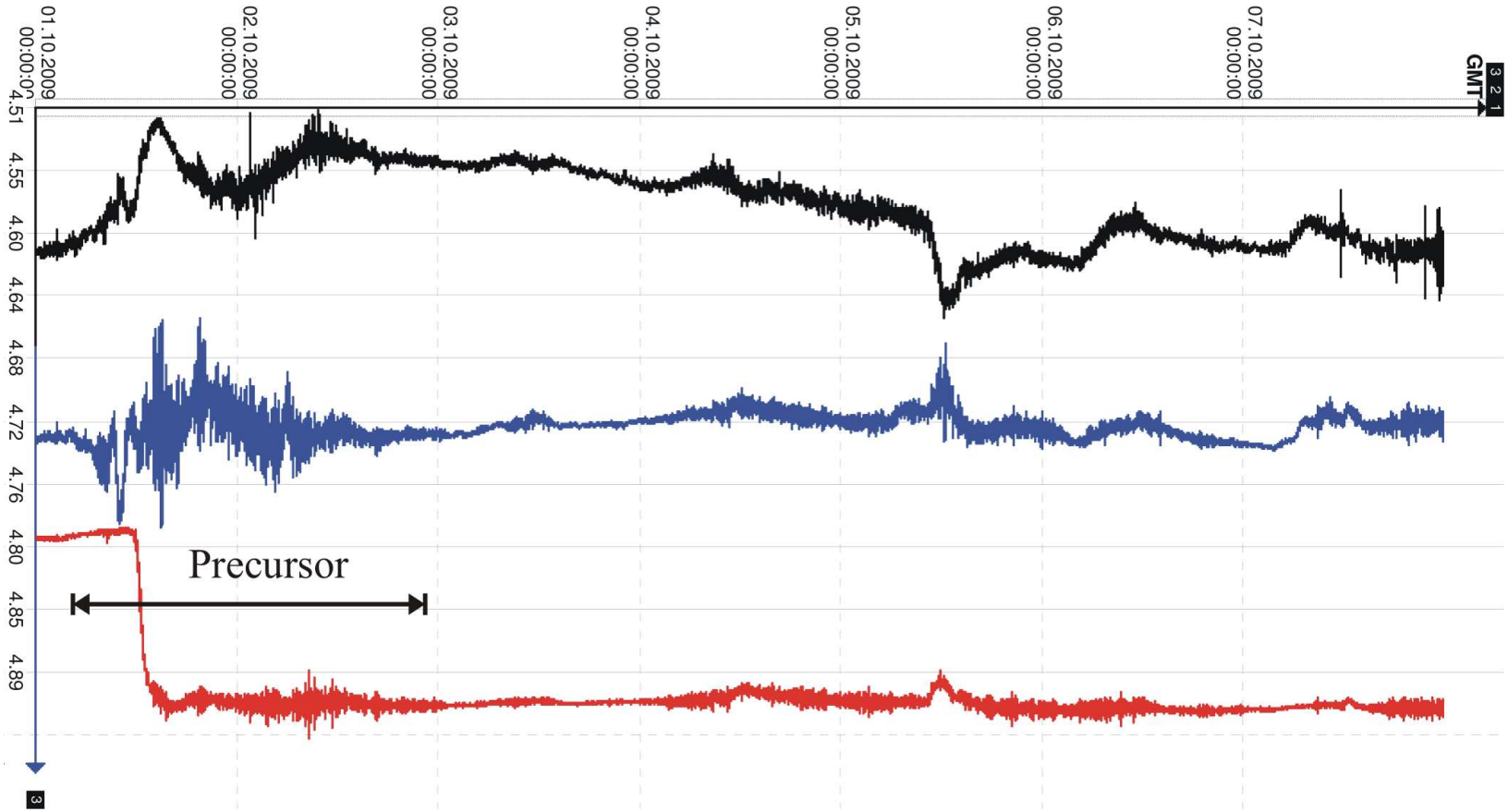

Precursor: 01.10.2009 – 03.10.2009

Earthquakes: 07.10.2009